STRUCTURAL DRAWINGS OF RESIDENTIAL 61 PHILLIPSON STREET WANGARATTA

CLIENT: CLARE COBURN

TECHNOCRETE

Structural & Durability Consulting Engineers

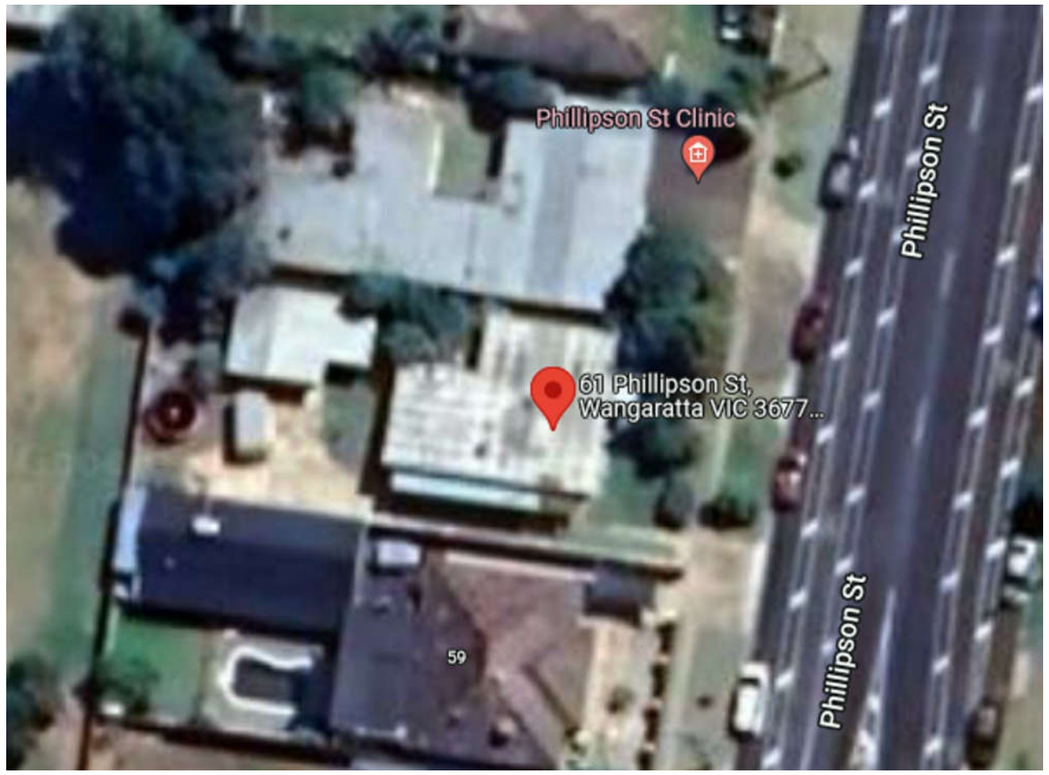

SHEET LIST	
SHEET NO.	**TITLE**
S00	COVER SHEET
S01	GENERAL & TECHNICAL NOTES
S02	STRUCTURAL ARRANGEMENTS ON PROPOSED FLOOR GROUND
S03	SUPPORT STRUCTURE DETAILS
S04	SUPPORT STRUCTURE & LINTEL DETAILS

ABN: 12 620 585 391
info@technocrete.com.au
PHONE: 02 60 214 406 MOBILE: 0413 027 015
OFFICE 3, SUITE 1B, 508 SWIFT ST, ALBURY, NSW, 2640
https://technocrete.com.au

GENERAL

1. THE STRUCTURAL DRAWINGS & DETAILS HAVE BEEN PREPARED BASED ON THE PROVIDED ARCHITECTURAL DRAWINGS & GEOTECHNICAL INVESTIGATION REPORT.

2. THE DRAWINGS SHALL BE READ BEFORE CONSTRUCTION. IF ANY DISCREPANCIES WERE NOTICED, IT MUST BE DISCUSSED WITH THE ENGINEER.

3. ALL DIMENSIONS MUST BE CHECKED AND VERIFIED BY THE CONTRACTOR/BUILDER.

4. DURING EXCAVATION AND CONSTRUCTION, REQUIRED PRACTICES MUST BE CONDUCTED TO PROVIDE SAFETY AND STABILITY OF THE STRUCTURE. EXCAVATIONS SHALL NOT EXTEND BELOW A LINE OF 30° TO THE HORIZONTAL FOR SAND, OR 45° TO THE HORIZONTAL FOR CLAY, FROM THE BOTTOM EDGE OF THE EDGE BEAM, STRIP FOOTINGS OR PIERS TO BENEATH THE EXPECTED EXCAVATION LEVEL.

5. ALL FORMWORK AND PROPPING MUST REMAIN FOR AT LEAST 7 DAYS AFTER PLACING CONCRETE SLAB.

6. THE BUILDING AND SITE DRAINAGE SYSTEM DESIGN ARE OUT OF STRUCTURAL DESIGN SCOPE OF WORK. CONTRACTOR'S EXPENSE.

STEEL REINFORCEMENT

1. REINFORCING BARS SHALL COMPLY WITH AS/NZS 4671 GRADE 500N. MINIMUM CONCRETE COVER FOR THE REINFORCEMENT SHALL BE:

· 40mm TO UN-PROTECTED GROUND
· 40mm TO EXTERNAL EXPOSURE
· 30mm TO MEMBRANE PROTECTED GROUND
· 20mm TO AN INTERNAL SURFACE

2. THE SLAB MESH SHALL BE PLACED TOWARDS THE TOP OF THE SLAB.

3. TRENCH MESH SHALL HAVE ALL CROSS WIRES CUT FLUSH WITH THE OUTER MAIN WIRES.

4. REINFORCING BARS SHALL HAVE A LAP LENGTH AT SLICES NOT LESS THAN:

· 500mm UP TO A BAR DIAMETER OF 12mm
· 700mm UP TO A BAR DIAMETER OF 16mm

5. ALL REINFORCING BARS SHALL BE FREE FROM DIRT, OIL, CORROSION OR DAMAGE.

6. SERVICE PENETRATIONS ARE PERMITTED THROUGH THE MIDDLE THIRD OF THE DEPTH OF EDGE AND STIFFENED BEAMS.

CONCRETE WORK

1. THE STRUCTURAL DESIGN OF THE SLAB HAS BEEN CONDUCTED IN ACCORDANCE WITH AS 2870:2011.

2. CONCRETE MIX DESIGN AND PRACTICES SHALL BE IN ACCORDANCE WITH AS 2870:2011 & 3600:2018.

3. THE DESIGN OF CONCRETE MIX SHALL BE A FUNCTION OF THE ENVIRONMENTAL EXPOSURE CLASSIFICATION OF THE SITE IN ACCORDANCE WITH AS 3600:2018.

4. THE TYPE OF SLAB HAS BEEN SELECTED AS **"INFILL SLAB"**

5. A PIER-AND-BEAM, PIER-AND-SLAB OR PILED FOOTING SYSTEM SHALL BE DESIGNED IN ACCORDANCE WITH ENGINEERING PRINCIPLES.

6. THE REBATE DEPTH SHALL BE NOT LESS THAN 20mm.

7. THE DEPTH OF CONCRETE BELOW THE EDGE REBATE SHALL BE NOT LESS THAN 150mm.

8. THE GRADE OF CONCRETE SHALL BE N20 (20MPa) WITH MAXIMUM SLUMP OF 100mm IN ACCORDANCE WITH AS 1379. THE MAXIMUM NOMINAL SIZE OF AGGREGATE SHALL BE 20mm.

9. THE SLAB SHALL BE PROTECTED WITH A VAPOUR BARRIER, OR DAMP-PROOFING MEMBRANE WITH THE FOLLOWING PROPERTIES:
· 200µm (0.2mm) THICK POLYETHYLENE IN ACCORDANCE WITH AS/NZS 4347.6
· IMPACT RESISTANCE IN ACCORDANCE WITH AS/NZS 4347.6
· PENETRATION RESISTANCE IN ACCORDANCE WITH CSIRO "METHOD FOR DETERMINATION OF THE PENETRATION RESISTANCE OF WATER VAPOUR BARRIERS TO FALLING AGGREGATE"

10. THE SHEET MEMBRANE SHALL BE PLACED BENEATH THE SLAB SO THAT THE BOTTOM SURFACE OF THE SLAB AND BEAMS, INCLUDING INTERNAL BEAMS, IS ENTIRELY UNDERLAID. LAPPING FOR CONTINUITY AT JOINTS SHALL BE NOT LESS THAN 200mm.

11. WHERE THE RAFT DESIGN INCLUDES INTERNAL BEAMS, THE STRUCTURAL CONTINUITY OF INTERNAL AND EXTERNAL BEAMS IN STIFFENED RAFTS, INCLUDING WAFFLE RAFTS, SHALL BE MAINTAINED.

12. ALL PLACING CONCRETE SHALL BE COMPACTED BY PROPER MECHANICAL VIBRATOR AND WET CURED FOR AT LEAST THREE (3) DAYS.

STRUCTURAL STEELWORK

1. WORKMANSHIP AND MATERIALS SHALL BE IN ACCORDANCE WITH AS4100.

2. WELDING SHALL BE PERFORMED BY EXPERIENCED TRADESMEN IN ACCORDANCE WITH AS1554 AND THE SPECIFICATION.

3. BOLTS NOT DESIGNATED SHALL BE M20 GRADE 8.8/S BOLTS TO AS1252 TIGHTENED TO A SNUG TIGHT FIT. BOLTS DESIGNATED 8.8/TF AND 8.8/TB SHALL BE HIGH STRENGTH STEEL BOLTS TO AS1252 FULLY TENSIONED IN ACCORDANCE WITH AS4100 ALL BOLTS TO BE HOT DIPPED GALVANISED. 8.8 GRADE BOLTS MUST NOT BE WELDED.

4. HOLD DOWN BOLTS TO BE 4.6/S GRADE UNLESS NOTED OTHERWISE. HOLD DOWN BOLTS TO BE GALVANISED.

5. IF SPECIFIED HIGH STRENGTH (8.8 GRADE) HOLDING DOWN BOLTS SHALL NOT BE WELDED BUT TIED WITH WIRE IN CAGES OR OTHER APPROVED TYING METHODS.

6. THE CONTRACTOR SHALL PROVIDE AND LEAVE IN PLACE UNTIL PERMANENT BRACING ELEMENTS ARE CONSTRUCTED SUCH TEMPORARY BRACING AS IS NECESSARY TO STABILISE THE STRUCTURE DURING ERECTION.

7. BEFORE FABRICATION HAS COMMENCED, THE SHOP DRAWINGS MUST BE REVIEWED BY THE ARCHITECT AND STRUCTURAL ENGINEER, REVIEW DOES NOT INCLUDE THE CHECKING OF DIMENSIONS AND DOES NOT REMOVE THE RESPONSABILITY OF THE FABRICATOR TO CHECK THE ACCURACY OF THE SHOP DRAWINGS.

8. ALL EXPOSED STEEL - CLASS 2½ BLAST 75 MICRONS INORGANIC ZINC SILICATE AND PAINT TO ARCHITECTS SPECIFICATIONS.

9. EXCEPT WHERE OTHERWISE SHOWN WELDS TO BE 6mm CONTINUOUS FILLET.

10. ALL STEELWORK BELOW GROUND LEVEL TO BE ENCASED IN CONCRETE.

11. TIE ALL STEELWORK TO MASONRY AT 600 MAXIMUM CENTRES AS DETAILED ON DRAWINGS OR WITH APPROVED FRAMING TIES.

12. RAMSET FIX TIMBER PLATES AND STUDS TO STEELWORK AT 600 MAXIMUM CENTRES.

13. REFER TO SPECIFICATIONS FOR ALL WELD MACRO TEST REQUIREMENTS FOR ALL WELDING PERSONNEL.

NOTE:

1. THE OWNER, BUILDER, AND SUB-CONTRACTOR SHALL VERIFY ALL DIMENSIONS, LEVELS, SETBACKS AND SPECIFICATIONS PRIOR TO COMMENCING WORKS OR ORDERING MATERIALS AND SHALL BE RESPONSIBLE FOR ENSURING THAT ALL BUILDING WORKS CONFORM TO THE BUILDING CODE OF AUSTRALIA, CURREN AUSTRALIAN STANDARDS, BUILDING REGULATIONS, AND TOWN PLANNING REQUIREMENTS. REPORT ANY DISCREPANCIES TO THIS OFFICE.

TECHNOCRETE
Structural & Durability Consulting Engineers
TECHNOCRETE CONSULTING ENGINEERS Pty. Ltd.
ABN: 12 620 585 391
https://technocrete.com.au

REV	DATE	DESCRIPTION

APPROVAL		DATE
DESIGNED BY:	Dr. FARHAD NABAVI	14/09/2022
DRAWN BY:	N. HEDAYATI	16/09/2022
CHECKED BY:	Dr. FARHAD NABAVI	17/09/2022
APPROVED BY:	Dr. FARHAD NABAVI	17/09/2022
CLIENT :	CLARE COBURN	

PROJECT NO:	TC22-P311
PROJECT TITLE:	STRUCTURAL DRAWINGS OF RESIDENTIAL 61 PHILLIPSON STREET WANGARATTA
DRAWING TITLE:	GENERAL & TECHNICAL NOTES
DRAWING NO:	S01
UNIT:	MILLIMETER
	A3

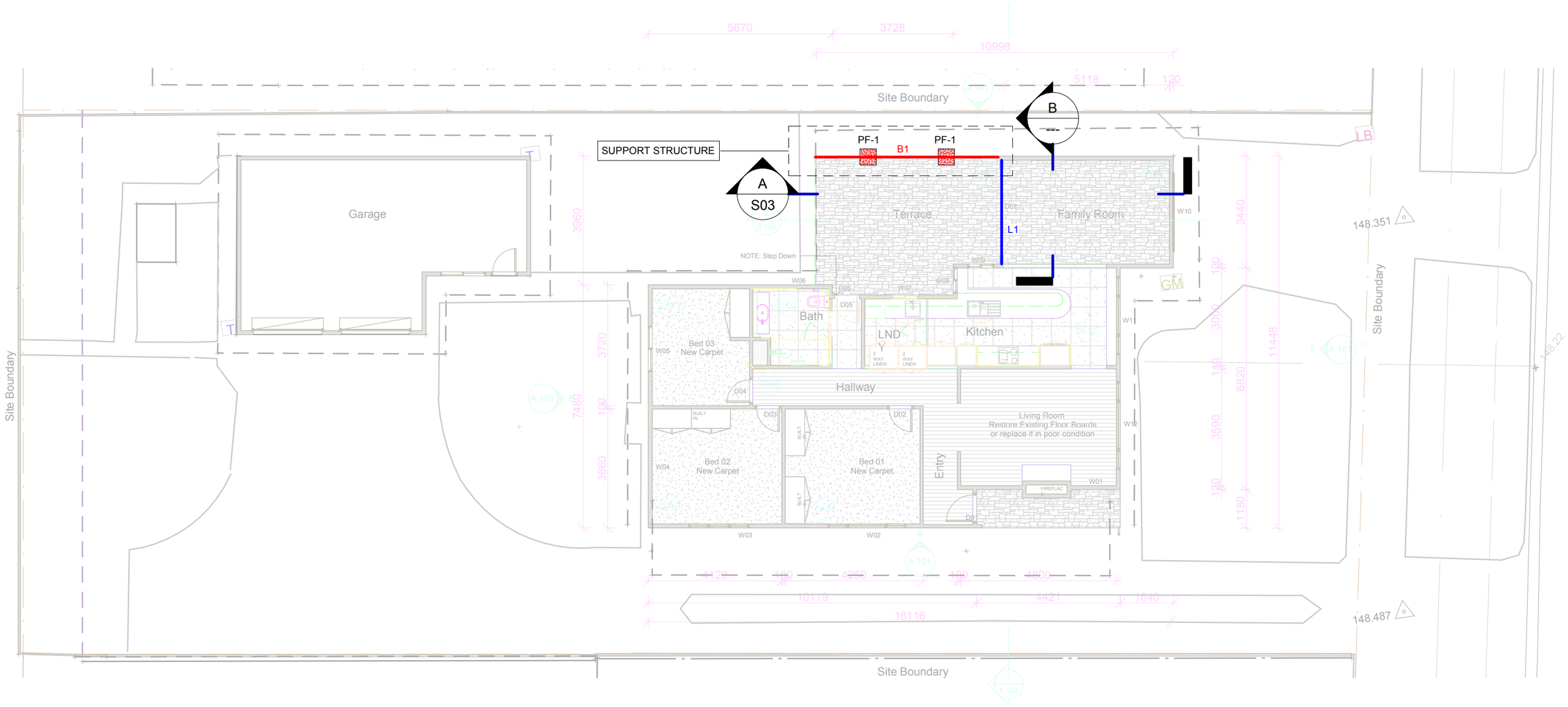

STRUCTURAL ELEMENTS ARRANGEMENT ON PROPOSED FLOOR GROUND

SCALE 1 : 125

TECHNOCRETE
Structural & Durability Consulting Engineers

TECHNOCRETE CONSULTING ENGINEERS Pty. Ltd.
ABN: 12 620 585 391
https://technocrete.com.au

REV	DATE	DESCRIPTION

APPROVAL		DATE
DESIGNED BY:	Dr. FARHAD NABAVI	14/09/2022
DRAWN BY:	N. HEDAYATI	16/09/2022
CHECKED BY:	Dr. FARHAD NABAVI	17/09/2022
APPROVED BY:	Dr. FARHAD NABAVI	17/09/2022
CLIENT :	CLARE COBURN	

PROJECT NO:	TC22-P311
PROJECT TITLE:	STRUCTURAL DRAWINGS OF RESIDENTIAL 61 PHILLIPSON STREET WANGARATTA
DRAWING TITLE:	STRUCTURAL ARRANGEMENTS ON PROPOSED FLOOR GROUND
DRAWING NO:	S02
UNIT:	MILLIMETER
	A3

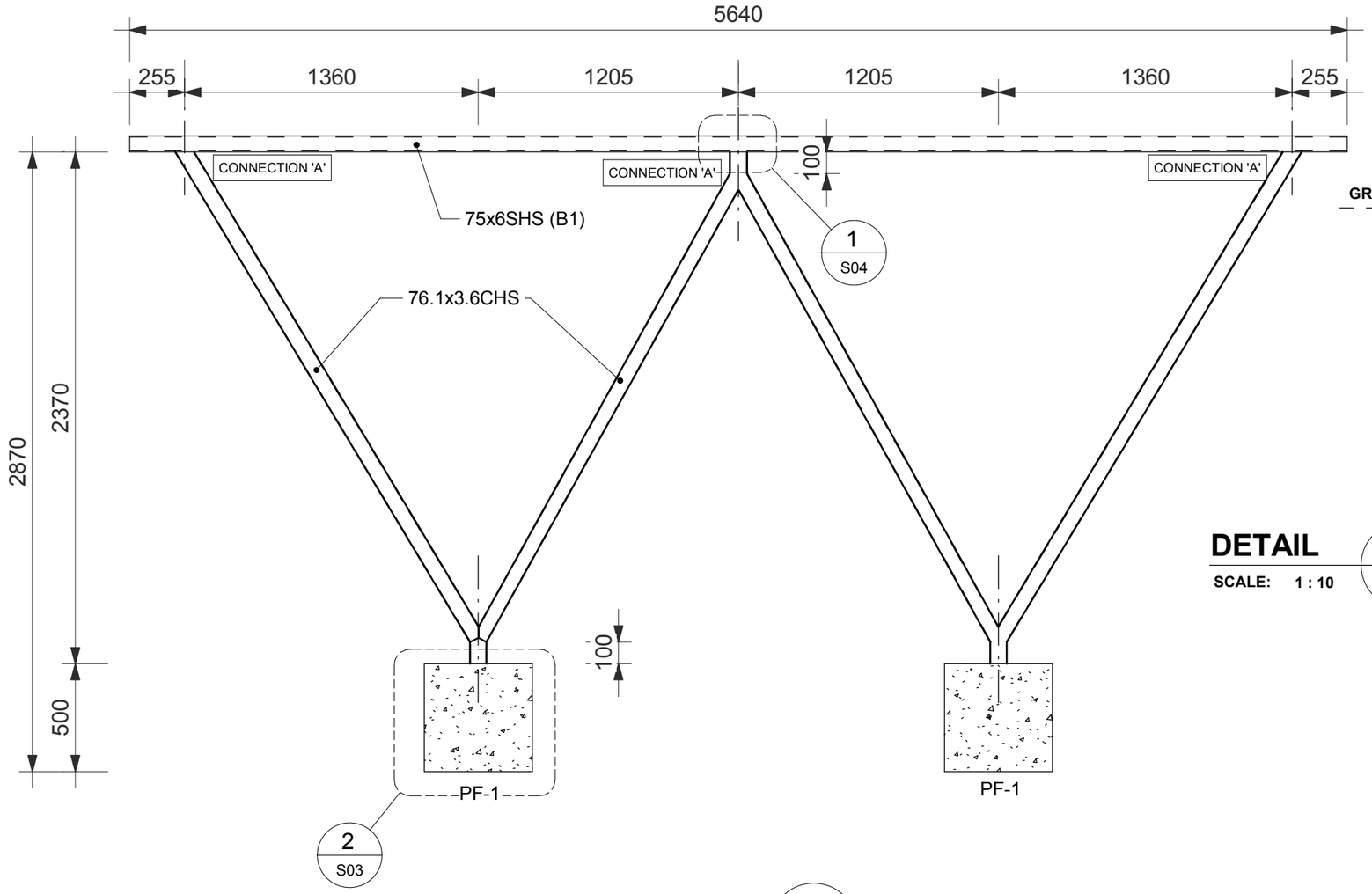

SECTION A / S02

SCALE: 1 : 25

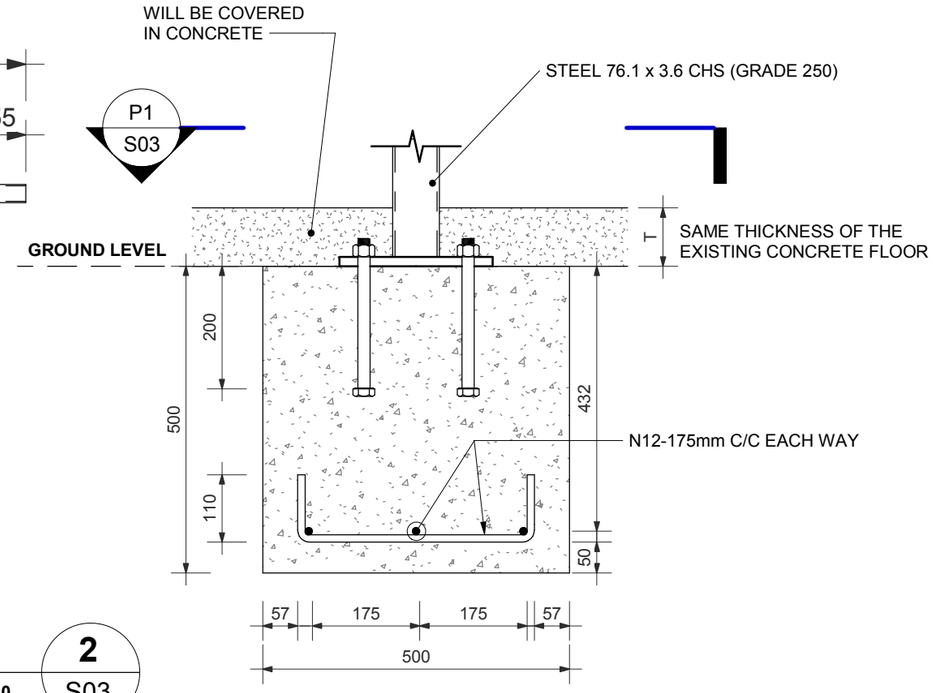

DETAIL 2 / S03

SCALE: 1 : 10

PAD FOOTING DETAILS

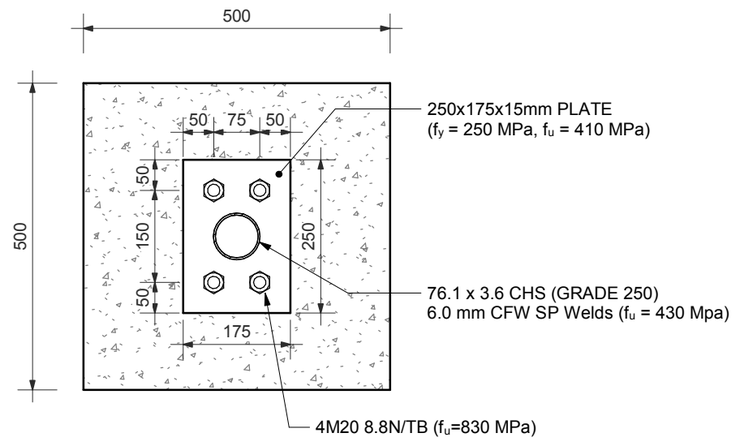

BASE PLATE DETAILS

SECTION P1 / S03

SCALE: 1 : 10

TECHNOCRETE
Structural & Durability Consulting Engineers

TECHNOCRETE CONSULTING ENGINEERS Pty. Ltd.
ABN: 12 620 585 391
https://technocrete.com.au

REV	DATE	DESCRIPTION

APPROVAL		DATE
DESIGNED BY:	Dr. FARHAD NABAVI	14/09/2022
DRAWN BY:	N. HEDAYATI	16/09/2022
CHECKED BY:	Dr. FARHAD NABAVI	17/09/2022
APPROVED BY:	Dr. FARHAD NABAVI	17/09/2022
CLIENT :	CLARE COBURN	

PROJECT NO: TC22-P311

PROJECT TITLE: STRUCTURAL DRAWINGS OF RESIDENTIAL 61 PHILLIPSON STREET WANGARATTA

DRAWING TITLE: SUPPORT STRUCTURE DETAILS

DRAWING NO: S03

UNIT: MILLIMETER

A3

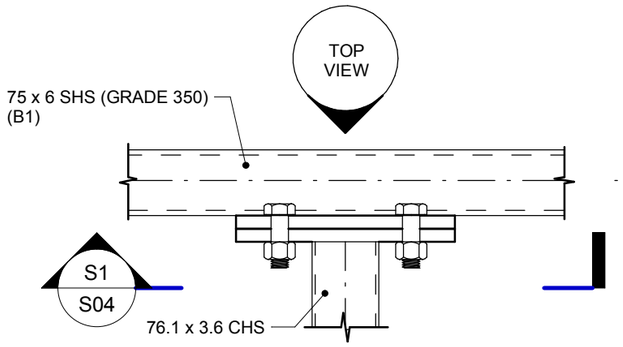

CONNECTION 'A' DETAIL

DETAIL 1 / S03

SCALE: N.T.S

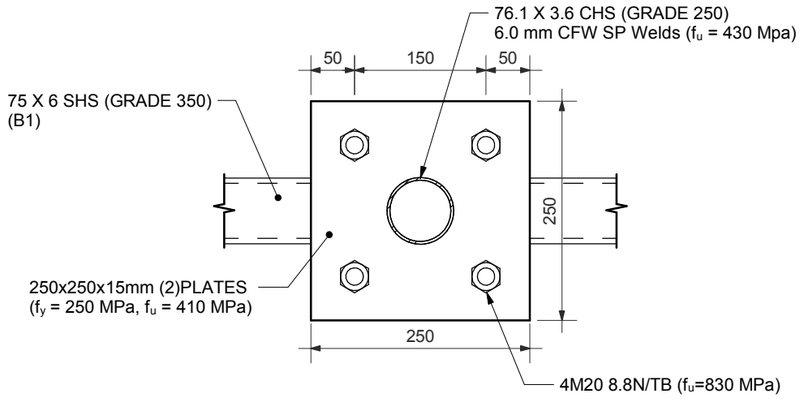

SECTION S1 / S04

SCALE: 1 : 7

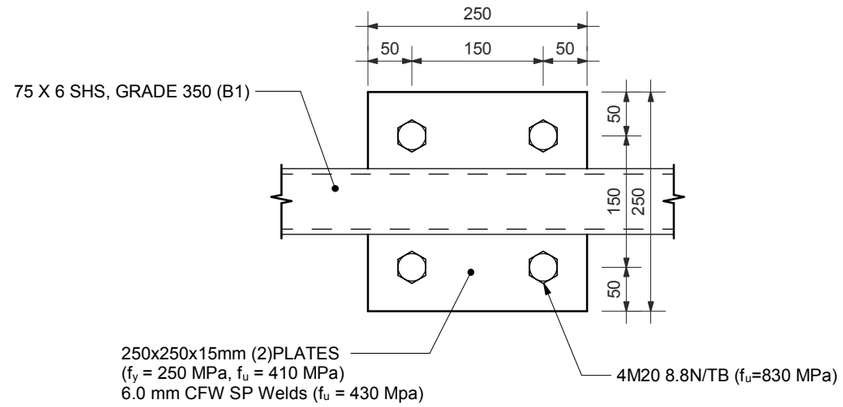

TOP VIEW

SCALE 1 : 7

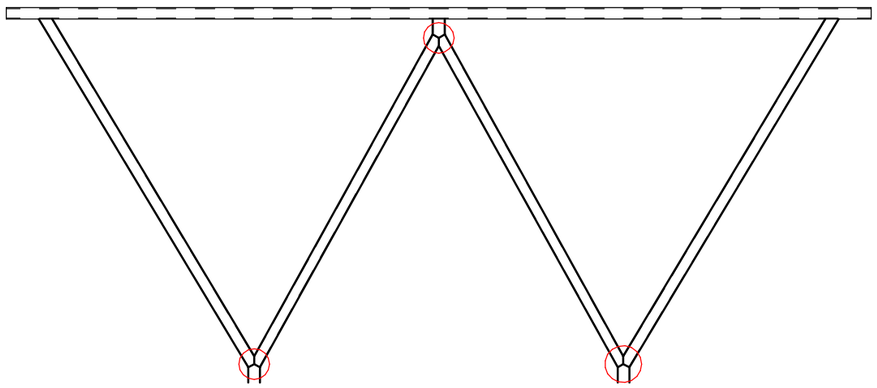

THE CHS MEMBERS ARE WELDED TO EACH OTHER. THE WELD SPECIFICATIONS ARE 6.0 mm CFW SP WELDS (f_u = 430 Mpa)

CHS-CHS CONNECTION

SCALE N.T.S

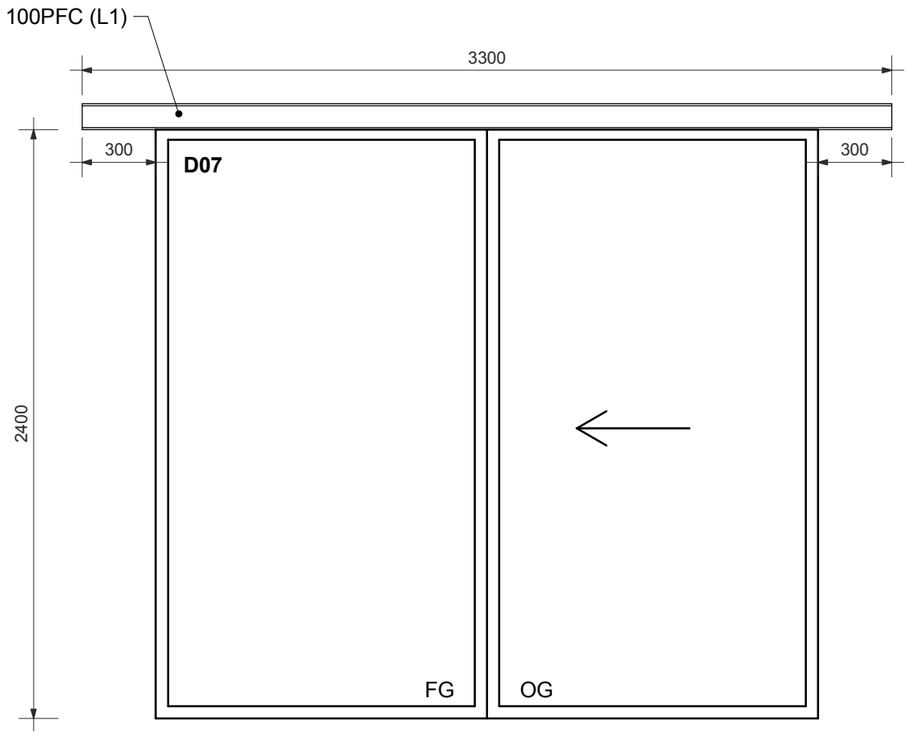

LINTEL DETAIL

SCALE 1 : 25

TECHNOCRETE
Structural & Durability Consulting Engineers

TECHNOCRETE CONSULTING ENGINEERS Pty. Ltd.
ABN: 12 620 585 391
https://technocrete.com.au

REV	DATE	DESCRIPTION

APPROVAL		DATE
DESIGNED BY:	Dr. FARHAD NABAVI	14/09/2022
DRAWN BY:	N. HEDAYATI	16/09/2022
CHECKED BY:	Dr. FARHAD NABAVI	17/09/2022
APPROVED BY:	Dr. FARHAD NABAVI	17/09/2022
CLIENT :	CLARE COBURN	

PROJECT NO:	TC22-P311		
PROJECT TITLE:	STRUCTURAL DRAWINGS OF RESIDENTIAL 61 PHILLIPSON STREET WANGARATTA		
DRAWING TITLE:	SUPPORT STRUCTURE & LINTEL DETAILS		
DRAWING NO:	S04	UNIT: MILLIMETER	A3